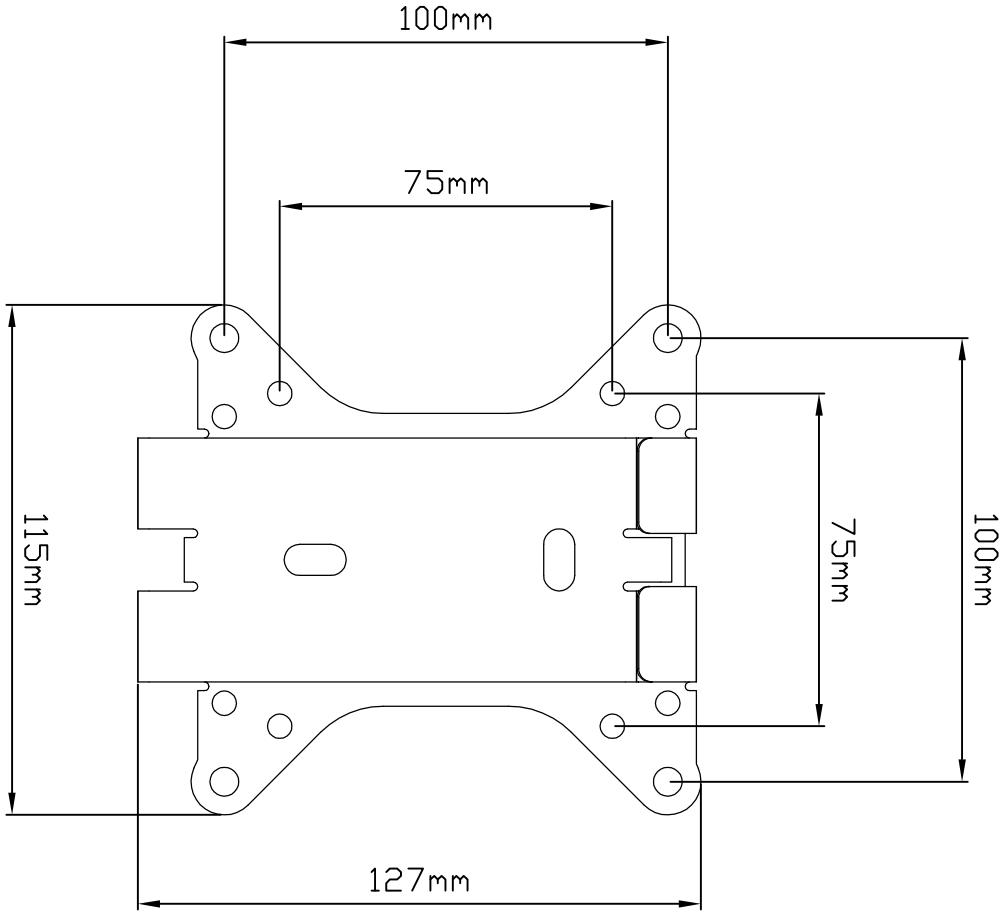
100mm
75mm
115mm
75mm
100mm
127mm

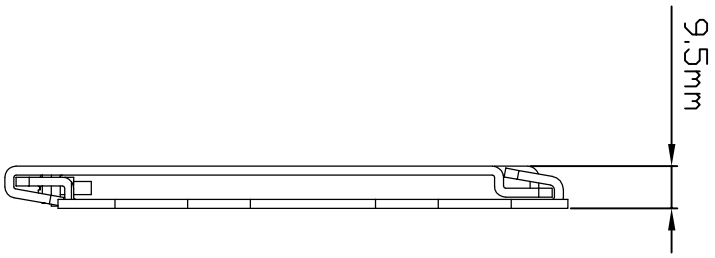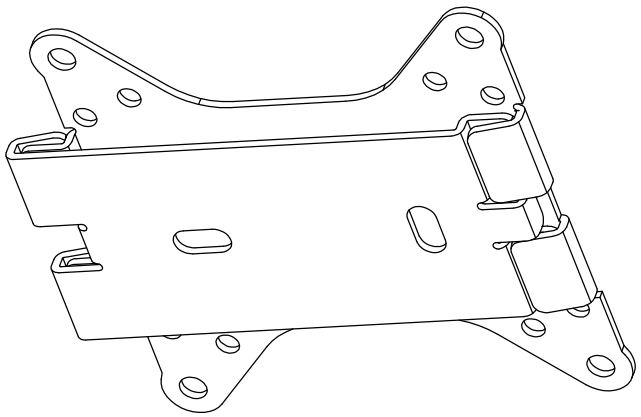
9.5mm