SB800P

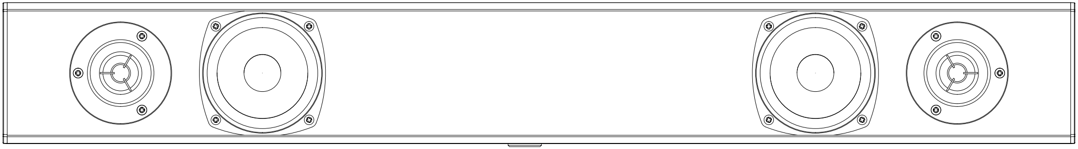

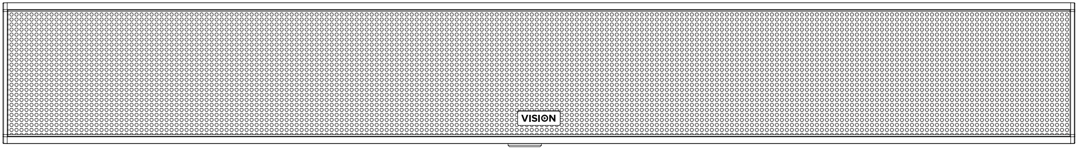
VISION

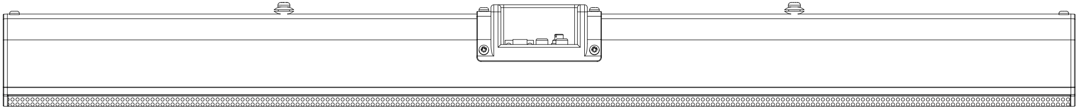

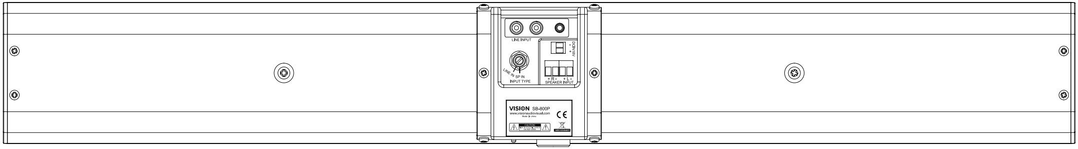
LINE INPUT
DCIN18V
- +
LINE IN
SP IN
INPUT TYPE
+ R -
+ L -
SPEAKER INPUT
VISION
SB-800P
www.visionaudiovisual.com
Made in china
CAUTION
CE

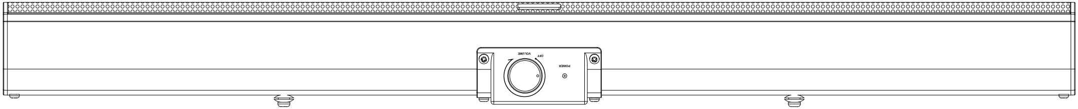
VOLUME
OFF
POWER

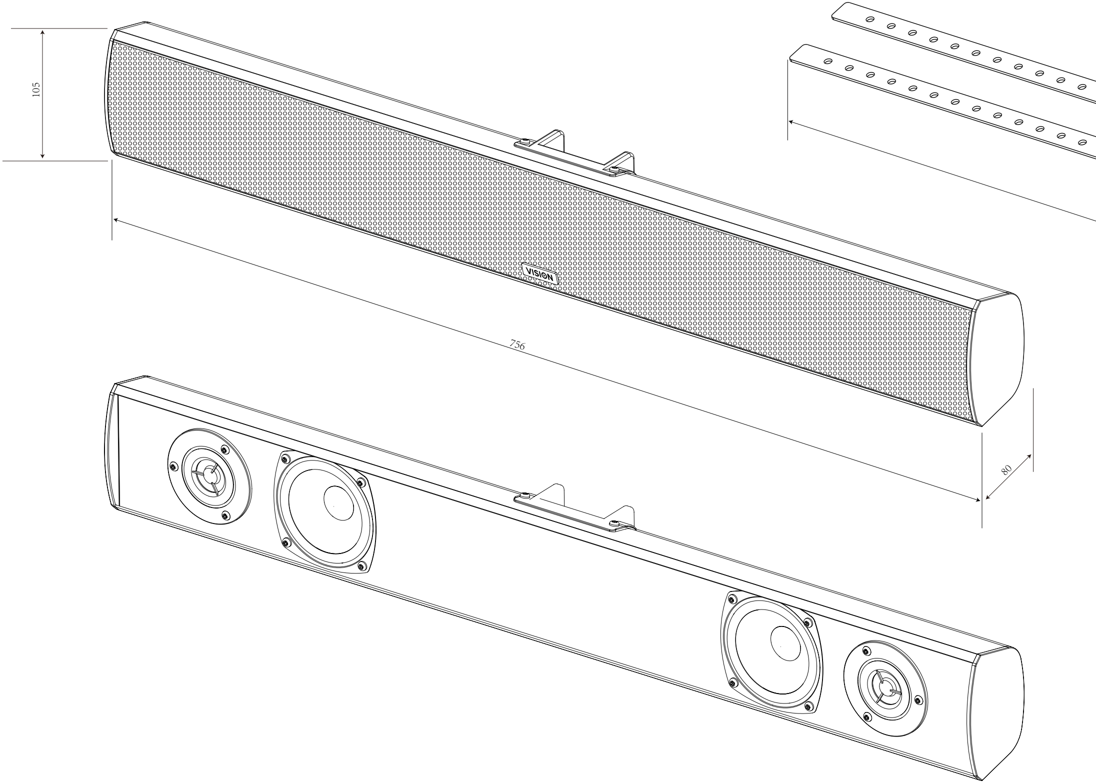
VISION

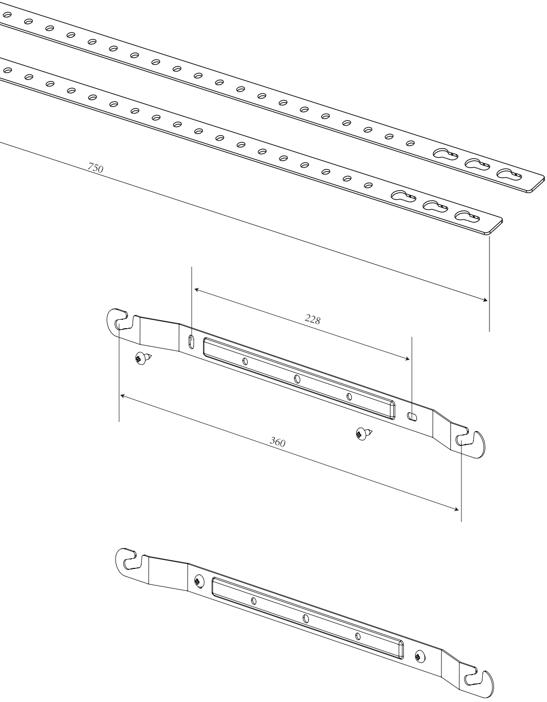

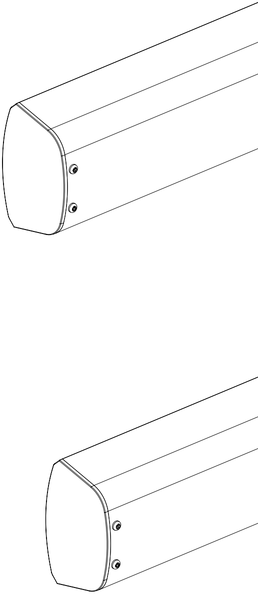

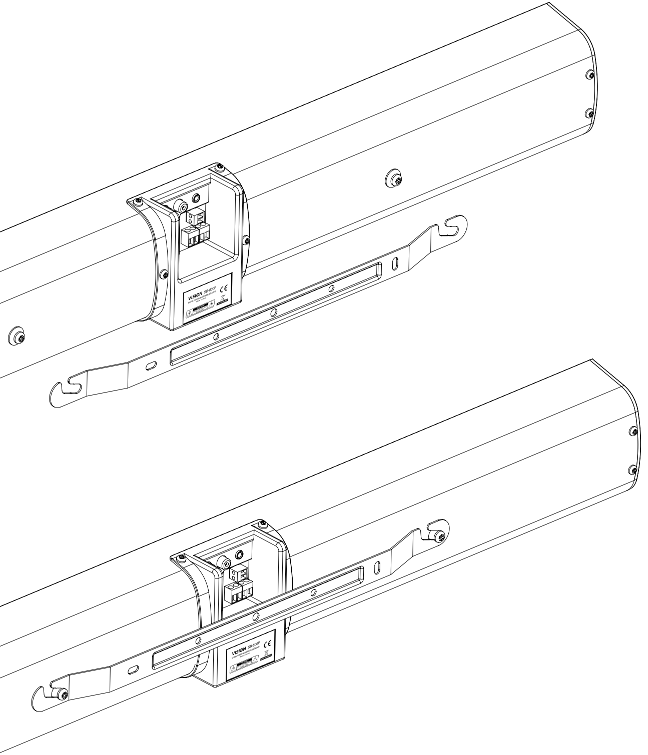
VISION SB-800P
CE
VISION SB-800P
CE