VISION
installation:innovation

CS-1800 OWNERS MANUAL

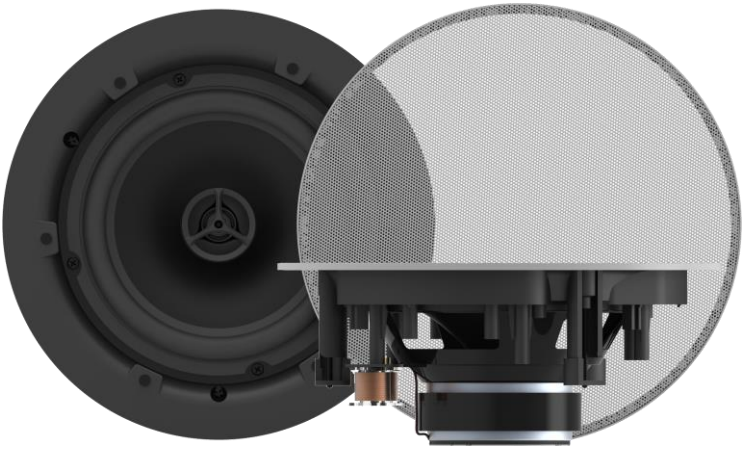

www.visionaudiovisual.com/techaudio/cs-1800

DECLARATION OF CONFORMITY

Where applicable Vision products are certified and comply with all known local regulations to a 'CB Certification' standard. Vision commits to ensure all products are fully compliant with all applicable certification standards for sale in the EU and other participating countries.

The product described in this owner manual is in compliance with RoHS (EU directive 2002/95/EC), and WEEE (EU directive 2002/96/EC) standards. This product should be returned to the place of purchase at the end of its useful life for recycling.

WARNINGS

CAUTION: TO REDUCE THE RISK OF ELECTRIC SHOCK DO NOT REMOVE COVER (OR BACK). NO USER-SERVICEABLE PARTS INSIDE. REFER SERVICING TO QUALIFIED SERVICE PERSONNEL.

The lightning flash with arrowhead symbol, within an equilateral triangle, is intended to alert the user to the presence of uninsulated "dangerous voltage" within the product's enclosure that may be of sufficient magnitude to constitute a risk of electric shock to persons.

The exclamation point within an equilateral triangle, is intended to alert the user to the presence of important operating and maintenance (servicing) instructions in the literature accompanying the appliance.

WARNING: TO REDUCE THE RISK OF FIRE OR ELECTRIC SHOCK, DO NOT EXPOSE THIS APPLIANCE TO RAIN OR MOISTURE.

All products are designed and imported into the EU by 'Vision' who is wholly owned by 'Azlan Logistics Ltd.', Registered in England Nr. 04625566 at Lion House, 4 Pioneer Business Park, Clifton Moor, York, YO30 4GH. WEEE Registration: GD0046SY

DECLARATION OF ORIGIN

All Vision products are made in the People's Republic of China (PRC).

PLACE OF INSTALLATION
Avoid installing this product under the following conditions:
• Moist or humid places
• Places exposed to direct sunlight or close to heating equipment
• Extremely cold locations
• Places subject to excessive vibration or dust
• Poorly ventilated places

Do not expose this product to dripping or splashing. DO NOT PLACE OBJECTS FILLED WITH LIQUIDS ON OR NEAR THIS PRODUCT!

PACKAGING
Save all packing material. It is essential for shipping in the event the unit ever needs repair.

NOTE: If original packaging is not used to return the unit to the service centre, damage in transit will not be covered by warranty.

POWER HANDLING
Power rating with regards to loudspeakers denotes how much power the loudspeaker can handling for a sustained period of time without distortion. These speakers are rated to accept up to 35 watts RMS.

WATTS
The most consistent standards for measuring watts are "Program Power" and "RMS" because these measure average sustained levels. Any low impedance amplifiers without an output from 2 x 10w to 2 x 70w (@ 8 ohms) are suitable for these speakers.

NOTE: The power output from an amplifier depends on the number of loudspeakers attached.
8 ohms normally denotes two loudspeakers attached
4 ohms normally denotes four loudspeakers attached

INSTALLATION

1. CUT HOLES IN CEILING TILES Draw around the cardboard template included (the circle will have diameter 198 mm / 7.8"). Cut along this line.

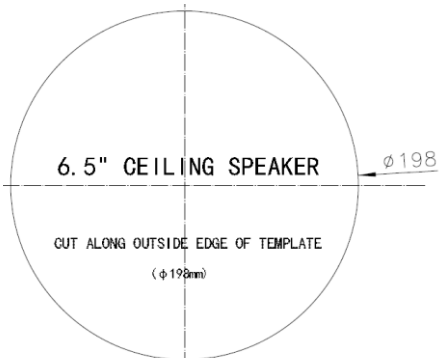

NOTE: These loudspeakers can only be fitted where there is a false ceiling.

2. REMOVE GRILLE Remove from loudspeakers.

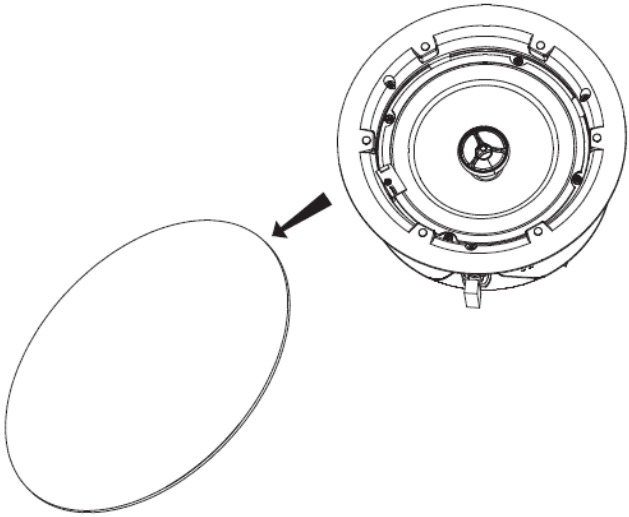

3. LOOSEN CLAMPS Loosen screws shown. The mounting clamps will turn in.

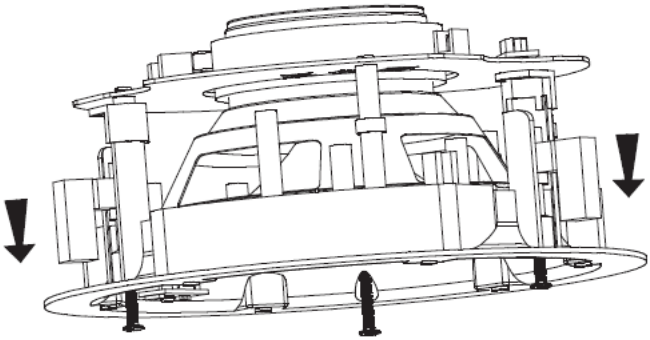

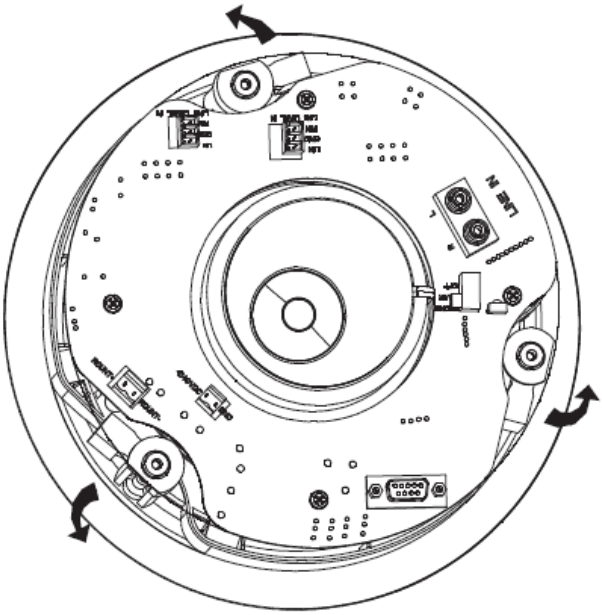

4. PUT INTO CEILING TILE Tighten screws as below. The mounting clamps automatically turn out and tighten down on ceiling tile.

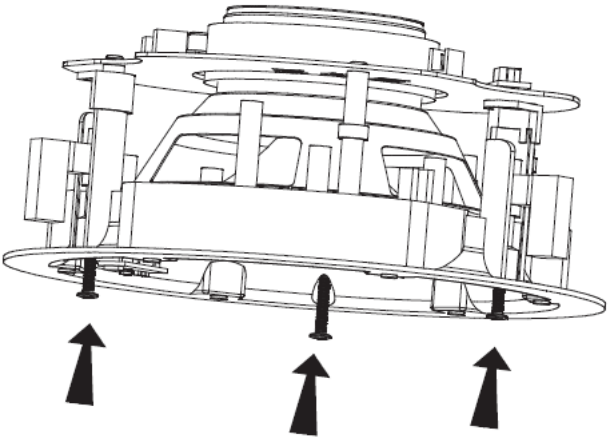

5. PUT GRILLE ON It is held in place by magnets.

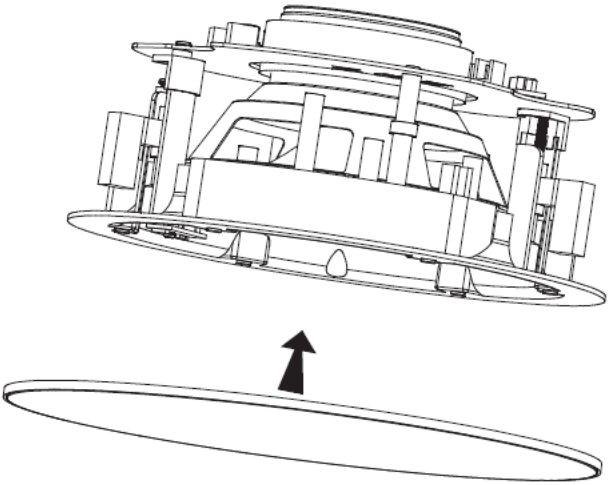

NOTE: These loudspeakers are not waterproof and are not designed to work in high humidity areas.

TROUBLESHOOTING

If your system is not operating properly, please refer to the following information. If the problem persists, disconnect from power and contact your AV reseller immediately.

Problem	Correction
Sound only coming out one side	• Turn off amplifier and switch output connections. If the side changes the amplifier is okay and the fault is with one of the loudspeakers. • Switch input connections and check input cabling.
Sound very quiet	• Have you used unshielded speaker cables? Use cable with gauge of 0.75mm or higher. Note: Phono or minijack cable is shielded and is not appropriate.

SPECIFICATIONS
LOUDSPEAKER DIMENSIONS: 224 x 82 mm/ 8.8" x 3.2"
CUTOUT SIZE: 198 mm / 7.8"
CARTON DIMENSIONS: 250 x 250 x 215 mm / 9.8" x 9.8" x 8.5"
SPEAKER WEIGHT: 1.1 kg / 2.4 lbs (each)
CARTON WEIGHT 2.5 kg / 5.5 lbs (per pair)
POWER HANDLING: 35 Watt RMS
WOOFER: 6.5" Polypropylene
TWEETER: 0.5" Silk
CONTRUCTION MATERIAL: ABS Plastic
SPEAKER TERMINALS: Binding post
NOMINAL IMPEDANCE: 8 ohms
SENSITIVITY: 89dB (1w/1m)
FREQUENCY RESPONSE: 50Hz-20kHz
COLOUR: White
ACCESSORIES INCLUDED: n/a
WARRANTY: Lifetime return-to-base
2 years onsite (UK only)
COMPLIANCES: RoHS, WEEE, CE/EMC, C-TICK, FCC

LIFETIME RETURN-TO-BASE WARRANTY

This product comes with a lifetime return to base warranty. If you have a problem you are required to provide a DETAILED DESCRIPTION of the fault.

Some Vision products are very technical and require troubleshooting all elements of the installation as it may not be the Vision product at fault. Because of this the manufacturer may refuse to replace the item if an adequate description is not provided.

- This warranty applies only to the original purchaser and is not transferable.
- This warranty protects you against the following:
    - Failure of any components, including the power supply.
    - Damage when the product is first removed from its packaging if reported within 24 hours of purchase.
- If the product is DOA (dead on arrival), you have 21 days from purchase date to notify the national distributor via your AV reseller.
- The original purchaser is responsible for shipment of the product to the Vision's appointed service centre.
- The liability of Vision is limited to the cost of replacement of the faulty unit under warranty except for death or injury (EU85/374/EEC).
- If the product is end of line (EOL) the Vision will provide a credit instead of replacement.
- This warranty does not protect this product against faults caused by abuse, misuse, incorrect installation, unstable or faulty power input, or modification.

Vision aims to send a replacement item within 5 working days however this may not always be possible, in which case it will be sent as soon as practicably possible. UK End users and resellers can request support at http://www.visionaudiovisual.com/support

2-YEAR ONSITE WARRANTY (UK ONLY)

The manufacturer provides an onsite warranty for the first two years taken from date of sale. This service can be requested at the url above and is provided at the manufacturer's discretion.

- This service is only provided for products which are difficult for an end user to get at and replace.
- The manufacturer will not provide the onsite service if
    - The reseller or end user has been abusive
    - The user has is taking unfair advantage of this service
- The manufacturer will pre-qualify the visit to ensure the fault relates to the Vision product.

The engineer visits are timed to ensure you are onsite and the room is accessible. A revisit WILL NOT be provided if access to the room is not provided at the arranged time. Engineers will wait 15 minutes only.

LEGAL DISCLAIMER: Because we are committed to improving our products, the details above may change without prior warning. This User Manual is published without warranty and any improvements or changes to the User Manual necessitated by typographical errors, inaccuracies of current information, or improvements to programs and/or equipment, may be made at any time and without notice. Such changes will be incorporated into new editions of the User Manual.