VISION
installation:innovation

CS-1800P POWERED SPEAKERS

OWNERS MANUAL

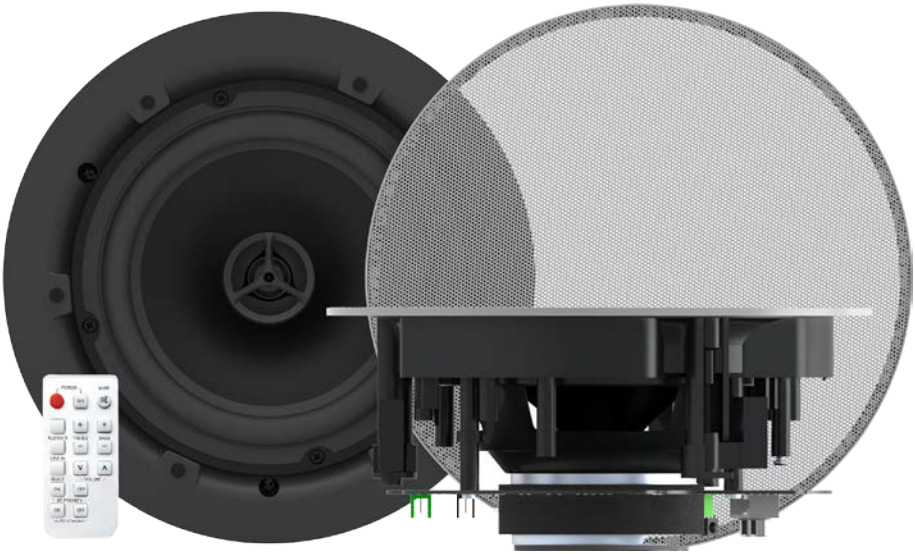

www.visionaudiovisual.com/techaudio/cs-1800p

DECLARATION OF CONFORMITY

Where applicable Vision products are certified and comply with all known local regulations to a 'CB Certification' standard. Vision commits to ensure all products are fully compliant with all applicable certification standards for sale in the EU and other participating countries.

The product described in this owner manual is in compliance with RoHS (EU directive 2002/95/EC), and WEEE (EU directive 2002/96/EC) standards. This product should be returned to the place of purchase at the end of its useful life for recycling.

WARNINGS

CAUTION: TO REDUCE THE RISK OF ELECTRIC SHOCK DO NOT REMOVE COVER (OR BACK). NO USER-SERVICEABLE PARTS INSIDE. REFER SERVICING TO QUALIFIED SERVICE PERSONNEL.

The lightning flash with arrowhead symbol, within an equilateral triangle, is intended to alert the user to the presence of uninsulated "dangerous voltage" within the product's enclosure that may be of sufficient magnitude to constitute a risk of electric shock to persons.

The exclamation point within an equilateral triangle, is intended to alert the user to the presence of important operating and maintenance (servicing) instructions in the literature accompanying the appliance.

WARNING: TO REDUCE THE RISK OF FIRE OR ELECTRIC SHOCK, DO NOT EXPOSE THIS APPLIANCE TO RAIN OR MOISTURE.

All products are designed and imported into the EU by 'Vision' who is wholly owned by 'Azlan Logistics Ltd.', Registered in England Nr. 04625566 at Lion House, 4 Pioneer Business Park, Clifton Moor, York, YO30 4GH. WEEE Registration: GD0046SY

DECLARATION OF ORIGIN

Vision products are made in the People's Republic of China (PRC).

USE ONLY DOMESTIC AC OUTLETS
Connecting the unit to an outlet supplying a higher voltage may create a fire hazard.

HANDLE THE POWER CORD WITH CARE
Do not disconnect the plug from the AC outlet by pulling the cord; always pull the plug itself. Pulling the cord may damage it. If you do not intend to use your unit for any considerable length of time, unplug the unit. Do not place furniture or other heavy objects on the cord, and try to avoid dropping heavy objects on it. Do not tie a knot in the power cord. Not only could the cord be damaged, but a short circuit could also be caused with a consequent fire hazard.

PLACE OF INSTALLATION
Avoid installing this product under the following conditions:
• Moist or humid places
• Places exposed to direct sunlight or close to heating equipment
• Extremely cold locations
• Places subject to excessive vibration or dust
• Poorly ventilated places

Do not expose this product to dripping or splashing. DO NOT PLACE OBJECTS FILLED WITH LIQUIDS ON OR NEAR THIS PRODUCT!

MOVING THE UNIT
Before moving the unit, be sure to pull out the power cord from the AC outlet and disconnect the interconnection cords with other units.

WARNING SIGNS
If you detect an abnormal smell or smoke, turn this product off immediately and unplug the power cord. Contact your reseller or Vision.

PACKAGING
Save all packing material. It is essential for shipping in the event the unit ever needs repair.

IF ORIGINAL PACKAGING IS NOT USED TO RETURN THE UNIT TO THE SERVICE CENTRE, DAMAGE IN TRANSIT WILL NOT BE COVERED BY WARRANTY.

WATTS
The most consistent standards for measuring watts are “Program Power” and “RMS” because these measure average sustained levels.

Where loudspeakers have integrated amplifiers, then load (resistance, measured in ohms) is known so the wattage rating is fixed.

CONNECTIVITY

Master

Line-level Input
(2-phono or Minijack)
From phone or laptop
headphone jack, or Blu-ray

Daisy-chain IN
(3.5mm minijack)

This input only works when IR switch is OFF. Do not connect a phone or laptop directly to this input.

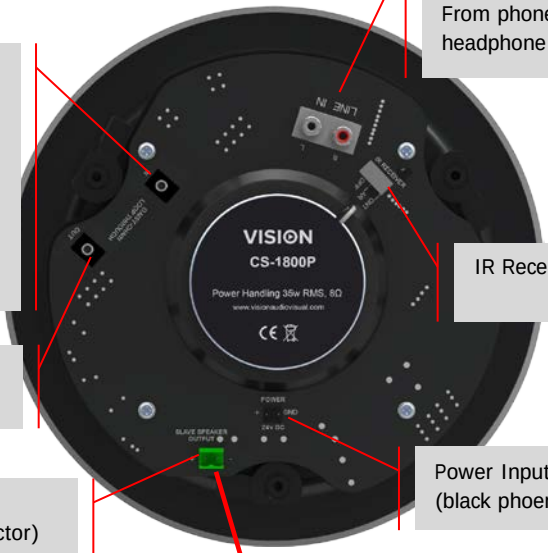

IR Receiver Switch

Daisy-chain OUT
(3.5mm minijack)

Power Input
(black phoenix connector)

Speaker Output
(green phoenix connector)

Slave

SPEAKER CABLE

A 5 metre (16 ft) speaker cable is included to connect the master to the slave. You can use other speaker cable; it must be unshielded with a gauge of no less than 0.75mm. WARRANTY VOID IF YOU USE UNSUITABLE SHIELDED CABLE E.G. PHONO OR MINIJACK CABLE.

IR RECEIVER SWITCH

FRONT - The IR receiver on the front will be active, meaning IR remote control can be used normally.

REAR – The IR receiver on the rear will be active, meaning the front IR receiver is disabled. Suitable for wired control system integration.

OFF – both front and rear receivers, and the phono input are disabled. Use this when this set is “slave set” in daisy-chain.

DAISY-CHAIN

You can connect multiple sets together – no limit to number of sets. The first set in chain is “master set” which switches inputs and adjusts volume.

All “slave sets” need IR switch set to OFF which disables phono input and activates minijack input.

IN – receives post-mix line-level signal from another CS-1800P set. Any set receiving signal via this input is “slave set". This input only works when IR receiver switch set to OFF.
Note: Do not connect a laptop or phone directly to this input. This input is only for signal that has been processed by a pre-amplifier.

OUT – passes post-mix line-level signal on to another set.

BLUETOOTH AUTO-SWITCHING

Use BT PRIORITY on remote control to enable auto-switching from line-level input to Bluetooth input when a Bluetooth device is paired.

If OFF switching needs to be done manually.
Note: Bluetooth is not always implemented properly on PCs so it may not work properly.

AUTO STANDBY

Use AUTO STANDBY on remote control to enable auto standby feature. This turns the loudspeakers to standby after 30 minutes of inactivity.

REMOTE CONTROL

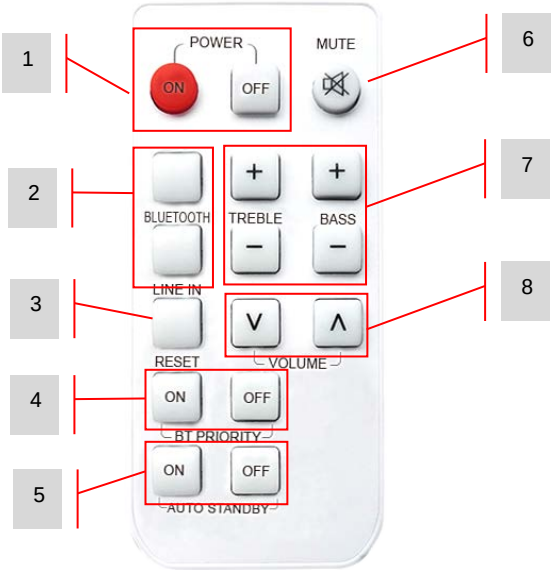

1. POWER On / Off
2. INPUT SELECT Bluetooth / Line-level (cabled) input
3. RESET tone factory reset
4. BLUETOOTH PRIORITY auto-switches when BT device paired
5. AUTO STANDBY activate or deactivate
6. MUTE
7. TONE treble and bass
8. VOLUME

INSTALLATION

1. CUT HOLES IN CEILING TILES Draw around the cardboard template included (the circle will have diameter 198 mm / 7.8"). Cut along this line.

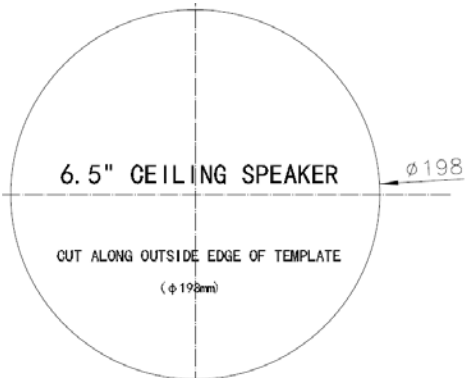

NOTE: These loudspeakers can only be fitted where there is a false ceiling.

2. REMOVE GRILLE Remove from loudspeakers.

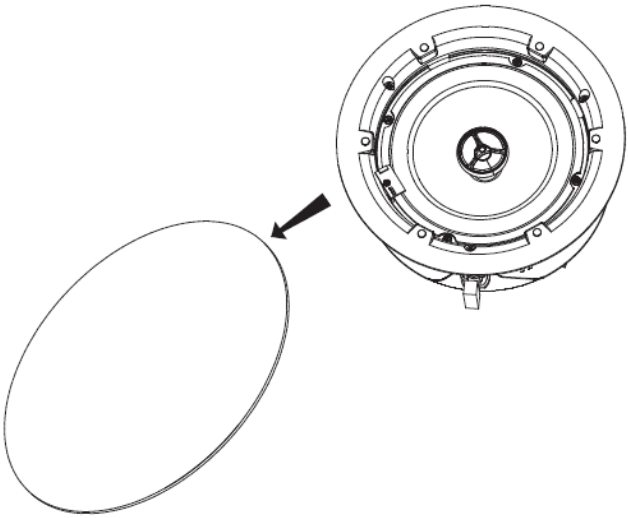

3. LOOSEN CLAMPS Loosen screws shown. The mounting clamps will turn in.

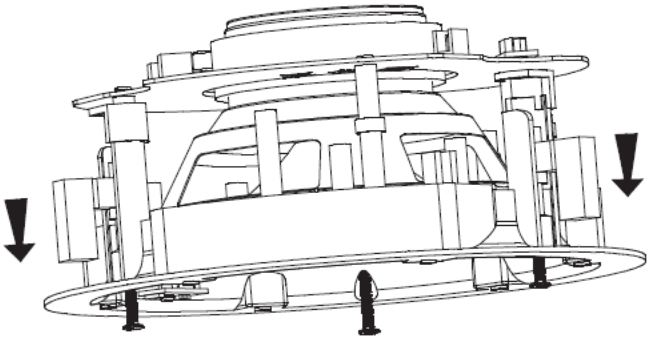

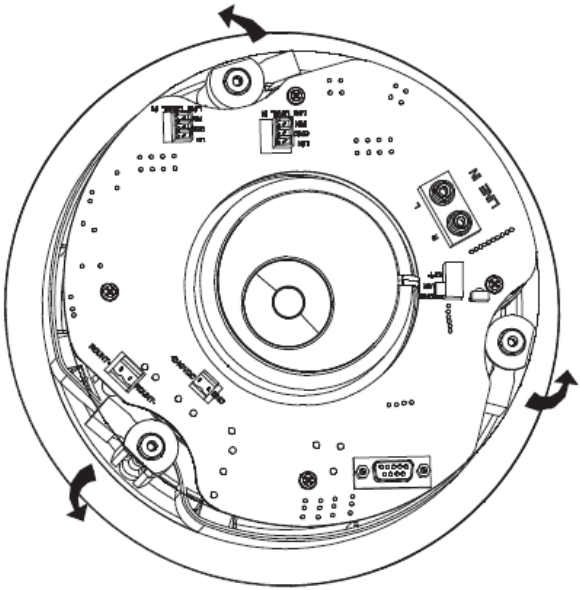

4. PUT INTO CEILING TILE Tighten screws as below. The mounting clamps automatically turn out and tighten down on ceiling tile.

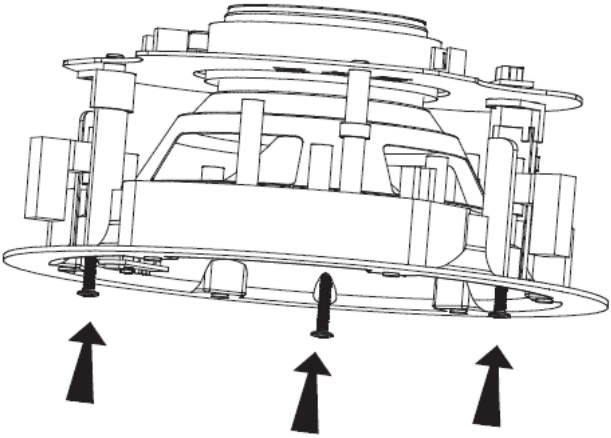

5. PUT GRILLE ON It is held in place by magnets.

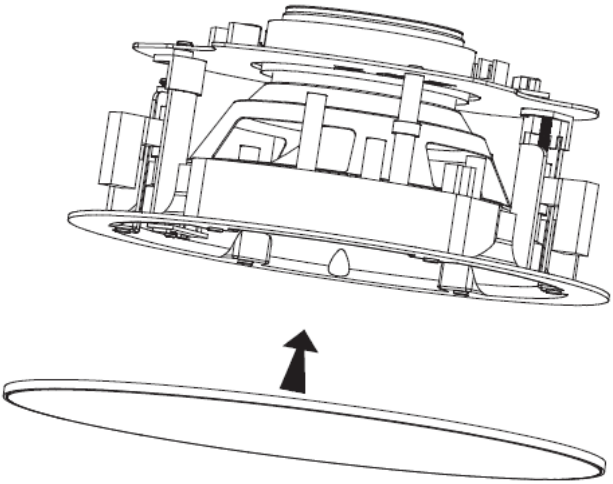

NOTE: These loudspeakers are not waterproof and are not designed to work in high humidity areas.

STATUS INDICATORS

On the front panel is a row of status LEDs:

BLUE LED – Bluetooth input
Flashing slowly: Bluetooth is in pairing mode
On: Device paired
If devices unpaired it will turn off after 10 minutes.

YELLOW – line-level input
On: cable input selected

RED LED – Amplifier in standby
Flashing slowly: mute activated
Flashing quickly: IR from remote control being received
On: loudspeakers off

CHANGING BLUETOOTH NAME

CS-1800P uses Bluetooth 4.0 LE. Where you have multiple sets in close proximity you may want to rename them.

1. SELECT BLUETOOTH INPUT on the CS-1800P remote control to put in pairing mode.
2. PAIR ANDROID DEVICE TO SPEAKERS Settings > Bluetooth on your phone or tablet.
3. GO INTO SETTINGS ON ANDRIOD DEVICE there is an option to rename here.

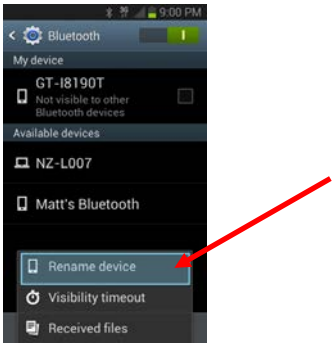

At time of writing iOS devices do not support changing name.

RS-232 CODES

This product can be controlled with the included remote control or by a professional AV control system using RS-232 codes.

Baud Rate: 9600
Pin 2 – Rx
Pin 3 – Tx
Pin 5 - GRD

HEX Codes	On Remote	Function
95 11 11	ON	Bring out of standby
95 15 15	OFF	Put into standby
95 05 05	MUTE	Mute on/off (auto standby activates after 30 minutes of mute)
95 01 01	BLUETOOTH	Input select “Bluetooth”
95 09 09	LINE IN	Input select “Line In”
95 08 08	TREBLE+	Increase treble gain by +1dB
95 0D 0D	TREBLE-	Decrease treble gain by -1dB
95 0C 0C	BASS+	Increase bass gain by +1dB
95 12 12	BASS-	Decrease bass gain by -1dB
95 10 10	RESET	Reset tone
95 07 07	VOL+	volume + (also cancels mute if active)
95 0B 0B	VOL-	volume - (also cancels mute if active)
95 02 02	BTPRIORITYON_	BT PRIORITY ON
95 04 04	BTPRIORITYOFF_	BT PRIORITY OFF
95 00 00	AUTOSTANDBYON	AUTO STANDBY ON
95 5C 5C	AUTOSTANDBYOFF	AUTO STANDBY OFF
95 A0 A0		Volume Step 0 minimum
95 A1 A1		Volume Step 1
95 A2 A2		Volume Step 2
95 A3 A3		Volume Step 3
95 A4 A4		Volume Step 4
95 A5 A5		Volume Step 5
95 A6 A6		Volume Step 6
95 A7 A7		Volume Step 7

95 A8 A8		Volume Step 8
95 A9 A9		Volume Step 9
95 AA AA		Volume Step 10
95 AB AB		Volume Step 11
95 AC AC		Volume Step 12
95 AD AD		Volume Step 13
95 AE AE		Volume Step 14
95 AF AF		Volume Step 15
95 B0 B0		Volume Step 16
95 B1 B1		Volume Step 17
95 B2 B2		Volume Step 18
95 B3 B3		Volume Step 19
95 B4 B4		Volume Step 20
95 B5 B5		Volume Step 21
95 B6 B6		Volume Step 22
95 B7 B7		Volume Step 23
95 B8 B8		Volume Step 24
95 B9 B9		Volume Step 25
95 BA BA		Volume Step 26
95 BB BB		Volume Step 27
95 BC BC		Volume Step 28
95 BD BD		Volume Step 29
95 BE BE		Volume Step 30
95 BF BF		Volume Step 31
95 C0 C0		Volume Step 32
95 C1 C1		Volume Step 33
95 C2 C2		Volume Step 34
95 C3 C3		Volume Step 35
95 C4 C4		Volume Step 36 maximum

A command is structured of 95 then the command twice
e.g. turn on: send **95** then send **11** twice.
Each part of the code is preceded by “0x” so the longhand is 0x**95** 0x**11** 0x**11**

TROUBLESHOOTING

Problem	Correction
No power light	Check power source and power input cable Check fuse in power cable plug Check battery in remote
Power light on but no sound	Turn the volume up with remote. Make sure the output volume on your test device is at full and if possible that it works through the built-in loudspeakers.
Hum or noise	Check that all input cables shielded properly. Poor quality cable with uneven shielding introduces noise. Long cables are particularly susceptible to picking up induced noise. Adding Ferrite cores may help to reduce this. Make sure all source devices are connected to the same power source. If disconnecting a laptop from power solves the problem then this is definitely the cause of the problem.
Slave loudspeaker not working	Check speaker cable to ensure there a proper connection at both ends. If possible test with another slave loudspeaker.
Slave loudspeaker is quieter than master loudspeaker	This is typically caused by the use of incorrect cable between the master and slave loudspeakers. It is too thin, or shielded. Replace cable immediately.
Device not connecting to Bluetooth	Bluetooth driver implementation on Windows PCs is not consistent. You may need to download drivers from your computer manufacturer's website, and even then you may not be able to make it work.
IR Remote not working	Check IR switch on rear set to front or rear

SPECIFICATIONS
LOUDSPEAKER DIMENSIONS: 232 x 95 mm/ 8.8″ x 3.7″ (diameter 224 mm without grille)
CUTOUT SIZE: 198 mm / 7.8″
CARTON DIMENSIONS: 250 x 250 x 270 mm / 9.8″ x 9.8″ x 10.6″

SPEAKER WEIGHT
Master: 1.3 kg / 2.9 lbs
Slave: 1.2 kg / 2.7 lbs

CARTON WEIGHT 4.0 kg / 8.8 lbs (per pair)

CONSTRUCTION MATERIAL: Plastic (ABS)

COLOUR: White

TECHNICAL DETAILS:
Amplifier Output: 2 x 30 watts (RMS)
Woofer: 6.5″ Polypropylene
Tweeter: 0.5″ Silk
Output Impedance: 8 ohms
Sensitivity: 89 dB (1w/1m)
Frequency response: 80 Hz-20 kHz
Power Consumption: ≤ 70 w

MASTER LOUDSPEAKER CONNECTIVITY:
Line-Level Input: 2-Phono or 3.5mm Minijack
Speaker Output: Phoenix connector
Daisy-chain Input: 3.5mm Minijack
Daisy-chain Output: 3.5mm Minijack

SLAVE LOUDSPEAKER INPUT:
Speaker input: Phoenix connector

ACCESSORIES INCLUDED:
1 x Speaker Cable 5 m (16.4′) long
1 x Remote Control (Battery included: CR2025 3V Li-Mn)

POWER SUPPLY: 100-240v 50/60Hz AC External Power Supply – 24 volt / 3 amp.
Laptop-style transformer. Includes 4 x 0.5m figure-8 power cables: UK/EU/US/AU. DC tail length: 4m.
Transformer dimensions: 120 x 52 x 32 mm / 4.72″ x 2.0″ x 1.2″

WARRANTY: Lifetime return-to-base
2 years onsite (UK only)

COMPLIANCE: RoHS, CE/EMC, IEC, FCC, SIG, RCM, TVC

ORDER PART CODE: CS-1800P [SAP: 3715630]

LIFETIME RETURN-TO-BASE WARRANTY

This product comes with a lifetime return to base warranty. If you have a problem you are required to provide a DETAILED DESCRIPTION of the fault.

Some Vision products are very technical and require troubleshooting all elements of the installation as it may not be the Vision product at fault. Because of this the manufacturer may refuse to replace the item if an adequate description is not provided.

- This warranty applies only to the original purchaser and is not transferable.
- This warranty protects you against the following:
    - Failure of any components, including the power supply.
    - Damage when the product is first removed from its packaging if reported within 24 hours of purchase.
- If the product is DOA (dead on arrival), you have 21 days from purchase date to notify the national distributor via your AV reseller.
- The original purchaser is responsible for shipment of the product to the Vision's appointed service centre.
- The liability of Vision is limited to the cost of replacement of the faulty unit under warranty except for death or injury (EU85/374/EEC).
- If the product is end of line (EOL) the Vision will provide a credit instead of replacement.
- This warranty does not protect this product against faults caused by abuse, misuse, incorrect installation, unstable or faulty power input, or modification.

Vision aims to send a replacement item within 5 working days however this may not always be possible, in which case it will be sent as soon as practicably possible. UK End users and resellers can request support at http://www.visionaudiovisual.com/support

2-YEAR ONSITE WARRANTY (UK ONLY)

The manufacturer provides an onsite warranty for the first two years taken from date of sale. This service can be requested at the url above and is provided at the manufacturer's discretion.

- This service is only provided for products which are difficult for an end user to get at and replace.
- The manufacturer will not provide the onsite service if
    - The reseller or end user has been abusive
    - The user has is taking unfair advantage of this service
- The manufacturer will pre-qualify the visit to ensure the fault relates to the Vision product.

The engineer visits are timed to ensure you are onsite and the room is accessible. A revisit WILL NOT be provided if access to the room is not provided at the arranged time. Engineers will wait 15 minutes only.

LEGAL DISCLAIMER: Because we are committed to improving our products, the details above may change without prior warning. This User Manual is published without warranty and any improvements or changes to the User Manual necessitated by typographical errors, inaccuracies of current information, or improvements to programs and/or equipment, may be made at any time and without notice. Such changes will be incorporated into new editions of the User Manual.